Marble Wall Decorations from the Imperial Mausoleum (4th C.) and the Basilica of San Lorenzo (5th C.) in Milan: an Update on Colored Marbles in Late Antique Milan

Neri, Elisabetta; Bugini, Roberto; Gazzoli, Silvia

Source / Izvornik: **ASMOSIA XI, Interdisciplinary Studies on Ancient Stone, Proceedings of the XI International Conference of ASMOSIA, 2018, 79 - 87**

Conference paper / Rad u zborniku

Publication status / Verzija rada: **Published version / Objavljena verzija rada (izdavačev PDF)**

https://doi.org/10.31534/XI.asmosia.2015/01.05

Permanent link / Trajna poveznica: https://urn.nsk.hr/urn:nbn:hr:123:678319

Rights / Prava: In copyright / Zaštićeno autorskim pravom.

Download date / Datum preuzimanja: **2024-03-29**

Repository / Repozitorij:

FCEAG Repository - Repository of the Faculty of Civil Engineering, Architecture and Geodesy, University of Split

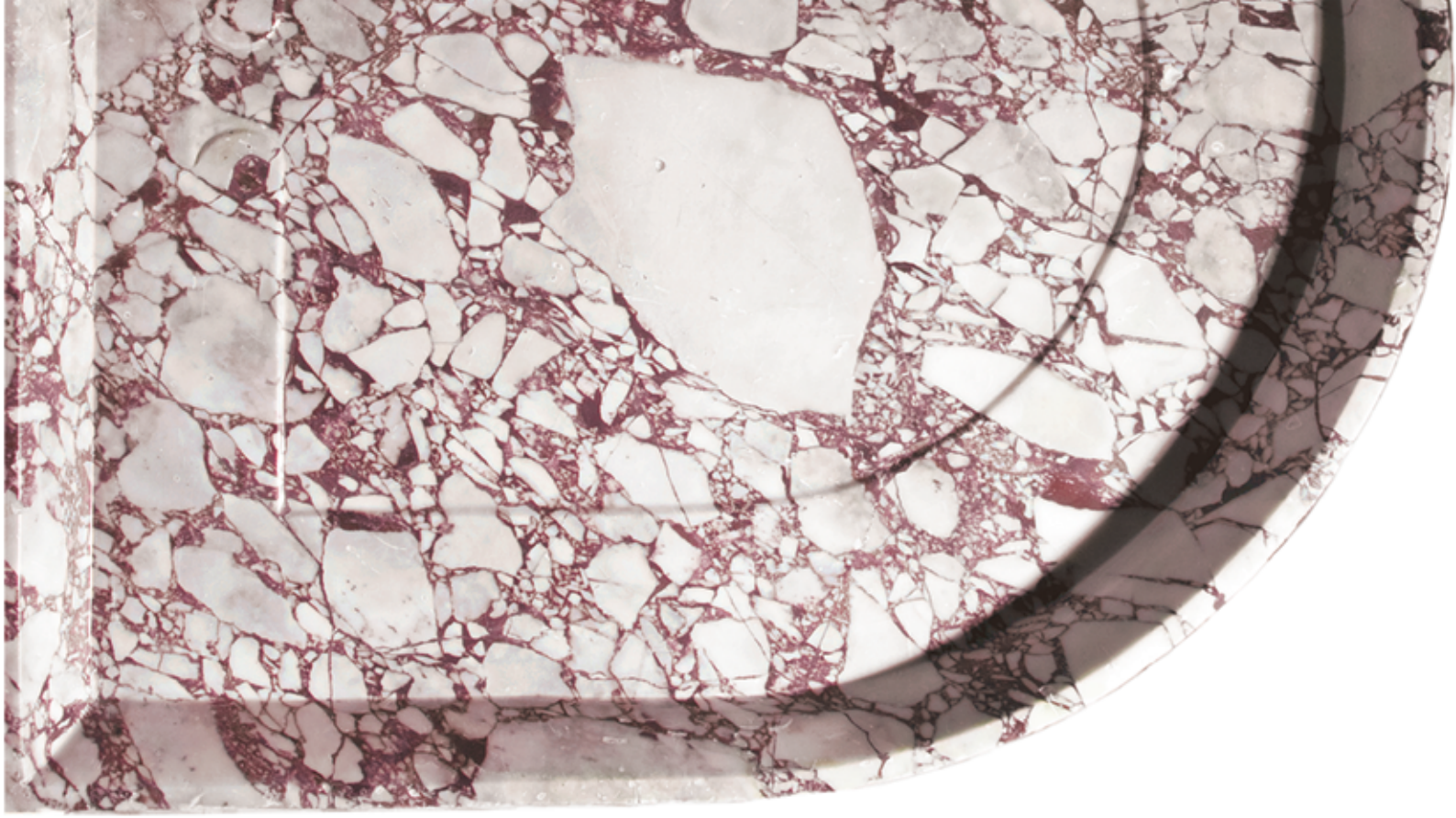

ASMOSIA XI

Interdisciplinary Studies on Ancient Stone

PROCEEDINGS

of the XI ASMOSIA Conference, Split 2015

Edited by Daniela Matetić Poljak and Katja Marasović

ARTS ACADEMY IN SPLIT

UNIVERSITY OF SPLIT,
FACULTY OF CIVIL ENGINEERING,
ARCHITECTURE AND GEODESY

Interdisciplinary Studies on Ancient Stone

Proceedings of the XI ASMOSIA Conference (Split 2015)

Publishers:

ARTS ACADEMY IN SPLIT
UNIVERSITY OF SPLIT

and

UNIVERSITY OF SPLIT
FACULTY OF CIVIL ENGINEERING,
ARCHITECTURE AND GEODESY

Technical editor:
Kate Bošković

English language editor:
Graham McMaster

Computer pre-press:
Nikola Križanac

Cover design:
Mladen Čulić

Cover page:
Sigma shaped *mensa* of *pavonazzetto* marble from Diocletian's palace in Split

ISBN 978-953-6617-49-4 (Arts Academy in Split)
ISBN 978-953-6116-75-1 (Faculty of Civil Engineering, Architecture and Geodesy)

e-ISBN 978-953-6617-51-7 (Arts Academy in Split)
e-ISBN 978-953-6116-79-9 (Faculty of Civil Engineering, Architecture and Geodesy)

CIP available at the digital catalogue of the University Library in Split, no 170529005

Association for the Study of Marble & Other Stones in Antiquity

ASMOSIA XI

Interdisciplinary Studies of Ancient Stone

Proceedings of the Eleventh International Conference of ASMOSIA,
Split, 18–22 May 2015

Edited by
Daniela Matetić Poljak
Katja Marasović

Split, 2018

Nota bene
All papers are subjected to an international review.
The quality of the images relies on the quality of the originals provided by the authors.

CONTENT

PRESENTATION 15

NECROLOGY: NORMAN HERZ (1923-2013) ***by Susan Kane*** 17

1. APPLICATIONS TO SPECIFIC ARCHEOLOGICAL QUESTIONS – USE OF MARBLE

Hermaphrodites and Sleeping or Reclining Maenads:
Production Centres and Quarry Marks
Patrizio Pensabene 25

First Remarks about the Pavement of the Newly Discovered Mithraeum
of the Colored Marbles at Ostia and New Investigations on
Roman and Late Roman White and Colored Marbles from Insula IV, IX
Massimiliano David, Stefano Succi and Marcello Turci 33

Alabaster. Quarrying and Trade in the Roman World:
Evidence from Pompeii and Herculaneum
Simon J. Barker and Simona Perna 45

Recent Work on the Stone at the Villa Arianna and the Villa San Marco
(Castellammare di Stabia) and Their Context within the Vesuvian Area
Simon J. Barker and J. Clayton Fant 65

Marble Wall Decorations from the Imperial Mausoleum (4th C.) and the Basilica
of San Lorenzo (5th C.) in Milan: an Update on Colored Marbles in Late Antique Milan
Elisabetta Neri, Roberto Bugini and Silvia Gazzoli 79

Sarcophagus Lids Sawn from their Chests
Dorothy H. Abramitis and John J. Herrmann 89

The Re-Use of Monolithic Columns in the Invention
and Persistence of Roman Architecture
Peter D. De Staebler 95

The Trade in Small-Size Statues in the Roman Mediterranean:
a Case Study from Alexandria
Patrizio Pensabene and Eleonora Gasparini 101

The Marble Dedication of Komon, Son of Asklepiades, from Egypt:
Material, Provenance, and Reinforcement of Meaning
Patricia A. Butz 109

Multiple Reuse of Imported Marble Pedestals at Caesarea Maritima in Israel
Barbara Burrell 117

Iasos and Iasian Marble between the Late Antique and Early Byzantine Eras
Diego Peirano 123

Thassos, Known Inscriptions with New Data
Tony Kozelj and Manuela Wurch-Kozelj 131

The Value of Marble in Roman *Hispalis*: Contextual, Typological and Lithological Analysis of an Assemblage of Large Architectural Elements Recovered at Nº 17 Goyeneta Street (Seville, Spain)
Ruth Taylor, Oliva Rodríguez, Esther Ontiveros, María Luisa Loza, José Beltrán and Araceli Rodríguez 143

Giallo Antico in Context. Distribution, Use and Commercial Actors According to New Stratigraphic Data from the Western Mediterranean (2nd C. Bc – Late 1st C. Ad)
Stefan Ardeleanu 155

Amethystus: Ancient Properties and Iconographic Selection
Luigi Pedroni 167

2. PROVENANCE IDENTIFICATION I: (MARBLE)

Unraveling the Carrara – Göktepe Entanglement
Walter Prochaska, Donato Attanasio and Matthias Bruno 175

The Marble of Roman Imperial Portraits
Donato Attanasio, Matthias Bruno, Walter Prochaska and Ali Bahadir Yavuz 185

Tracing Alabaster (Gypsum or Anhydrite) Artwork Using Trace Element Analysis and a Multi-Isotope Approach (Sr, S, O)
Lise Leroux, Wolfram Kloppmann, Philippe Bromblet, Catherine Guerrot, Anthony H. Cooper, Pierre-Yves Le Pogam, Dominique Vingtain and Noel Worley 195

Roman Monolithic Fountains and Thasian Marble
Annewies van den Hoek, Donato Attanasio and John J. Herrmann 207

Archaeometric Analysis of the Alabaster Thresholds of Villa A, Oplontis (Torre Annunziata, Italy) and New Sr and Pb Isotopic Data for *Alabastro Ghiaccione del Circeo*
Simon J. Barker, Simona Perna, J. Clayton Fant, Lorenzo Lazzarini and Igor M. Villa 215

Roman Villas of Lake Garda and the Occurrence of Coloured Marbles in the Western Part of "Regio X Venetia et Histria" (Northern Italy)
Roberto Bugini, Luisa Folli and Elisabetta Roffia 231

Calcitic Marble from Thasos in the North Adriatic Basin: Ravenna, Aquileia, and Milan
John J. Herrmann, Robert H. Tykot and Annewies van den Hoek 239

Characterisation of White Marble Objects from the Temple of Apollo and the House of Augustus (Palatine Hill, Rome)
Francesca Giustini, Mauro Brilli, Enrico Gallocchio and Patrizio Pensabene 247

Study and Archeometric Analysis of the Marble Elements Found in the Roman Theater at Aeclanum (Mirabella Eclano, Avellino - Italy)
Antonio Mesisca, Lorenzo Lazzarini, Stefano Cancelliere and Monica Salvadori 255

Two Imperial Monuments in Puteoli:
Use of Proconnesian Marble in the Domitianic and Trajanic Periods in Campania
Irene Bald Romano, Hans Rupprecht Goette, Donato Attanasio and Walter Prochaska 267

Coloured Marbles in the Neapolitan Pavements (16th And 17th Centuries):
the Church of *Santi Severino e Sossio*
Roberto Bugini, Luisa Folli and Martino Solito 275

Roman and Early Byzantine Sarcophagi of Calcitic Marble from Thasos in Italy:
Ostia and Siracusa
Donato Attanasio, John J. Herrmann, Robert H. Tykot and Annewies van den Hoek 281

Revisiting the Origin and Destination of the Late Antique Marzamemi
'Church Wreck' Cargo
Justin Leidwanger, Scott H. Pike and Andrew Donnelly 291

The Marbles of the Sculptures of Felix Romuliana in Serbia
Walter Prochaska and Maja Živić 301

Calcitic Marble from Thasos and Proconnesos in Nea Anchialos (Thessaly)
and Thessaloniki (Macedonia)
Vincent Barbin, John J. Herrmann, Aristotle Mentzos and Annewies van den Hoek 311

Architectural Decoration of the Imperial Agora's Porticoes at Iasos
Fulvia Bianchi, Donato Attanasio and Walter Prochaska 321

The Winged Victory of Samothrace - New Data on the Different Marbles
Used for the Monument from the Sanctuary of the Great Gods
Annie Blanc, Philippe Blanc and Ludovic Laugier 331

Polychrome Marbles from the Theatre of the Sanctuary of Apollo Pythios
in Gortyna (Crete)
Jacopo Bonetto, Nicolò Mareso and Michele Bueno 337

Paul the Silentiary, Hagia Sophia, Onyx, Lydia, and Breccia Corallina
John J. Herrmann and Annewies van den Hoek 345

Incrustations from Colonia Ulpia Traiana (Near Modern Xanten, Germany)
Vilma Ruppienė and Ulrich Schüssler 351

Stone Objects from Vindobona (Austria) – Petrological Characterization
and Provenance of Local Stone in a Historico-Economical Setting
Andreas Rohatsch, Michaela Kronberger, Sophie Insulander,
Martin Mosser and Barbara Hodits 363

Marbles Discovered on the Site of the Forum of Vaison-la-Romaine (Vaucluse, France):
Preliminary Results
Elsa Roux, Jean-Marc Mignon, Philippe Blanc and Annie Blanc 373

Updated Characterisation of White Saint-Béat Marble. Discrimination Parameters
from Classical Marbles
Hernando Royo Plumed, Pilar Lapeunte, José Antonio Cuchí,
Mauro Brilli and Marie-Claire Savin 379

Grey and Greyish Banded Marbles from the Estremoz Anticline in Lusitania
Pilar Lapuente, Trinidad Nogales-Basarrate, Hernando Royo Plumed, Mauro Brilli and Marie-Claire Savin 391

New Data on Spanish Marbles: the Case of *Gallaecia* (NW Spain)
Anna Gutiérrez Garcia-M., Hernando Royo Plumed and Silvia González Soutelo 401

A New Roman Imperial Relief Said to Be from Southern Spain: Problems of Style, Iconography, and Marble Type in Determining Provenance
John Pollini, Pilar Lapuente, Trinidad Nogales-Basarrate and Jerry Podany 413

Reuse of the *Marmora* from the Late Roman Palatial Building at Carranque (Toledo, Spain) in the Visigothic Necropolis
Virginia García-Entero, Anna Gutiérrez Garcia-M. and Sergio Vidal Álvarez 427

Imperial Porphyry in Roman Britain
David F. Williams 435

Recycling of Marble: Apollonia/Sozousa/Arsuf (Israel) as a Case Study
Moshe Fischer, Dimitris Tambakopoulos and Yannis Maniatis 443

Thasian Connections Overseas: Sculpture in the Cyrene Museum (Libya) Made of Dolomitic Marble from Thasos
John J. Herrmann and Donato Attanasio 457

Marble on Rome's Southwestern Frontier: Thamugadi and Lambaesis
Robert H. Tykot, Ouahiba Bouzidi, John J. Herrmann and Annewies van den Hoek 467

Marble and Sculpture at Lepcis Magna (Tripolitania, Libya): a Preliminary Study Concerning Origin and Workshops
Luisa Musso, Laura Buccino, Matthias Bruno, Donato Attanasio and Walter Prochaska 481

The Pentelic Marble in the Carnegie Museum of Art Hall of Sculpture, Pittsburgh, Pennsylvania
Albert D. Kollar 491

Analysis of Classical Marble Sculptures in the Michael C. Carlos Museum, Emory University, Atlanta
Robert H. Tykot, John J. Herrmann, Renée Stein, Jasper Gaunt, Susan Blevins and Anne R. Skinner 501

3. PROVENANCE IDENTIFICATION II: (OTHER STONES)

Aphrodisias and the Regional Marble Trade. The *Scaenae Frons* of the Theatre at Nysa
Natalia Toma 513

The Stones of Felix Romuliana (Gamzigrad, Serbia)
Bojan Djurić, Divna Jovanović, Stefan Pop Lazić and Walter Prochaska 523

Aspects of Characterisation of Stone Monuments from Southern Pannonia
Branka Migotti 537

The Budakalász Travertine Production
Bojan Djurić, Sándor Kele and Igor Rižnar 545

Stone Monuments from Carnuntum and Surrounding Areas (Austria) – Petrological Characterization and Quarry Location in a Historical Context
Gabrielle Kremer, Isabella Kitz, Beatrix Moshammer, Maria Heinrich and Erich Draganits 557

Espejón Limestone and Conglomerate (Soria, Spain): Archaeometric Characterization, Quarrying and Use in Roman Times
Virginia García-Entero, Anna Gutiérrez Garcia-M, Sergio Vidal Álvarez, María J. Peréx Agorreta and Eva Zarco Martínez 567

The Use of Alcover Stone in Roman Times (*Tarraco, Hispania Citeri*or). Contributions to the *Officina Lapidaria Tarraconensis*
Diana Gorostidi Pi, Jordi López Vilar and Anna Gutiérrez Garcia-M. 577

4. ADVANCES IN PROVENANCE TECHNIQUES, METHODOLOGIES AND DATABASES

Grainautline – a Supervised Grain Boundary Extraction Tool Supported by Image Processing and Pattern Recognition
Kristóf Csorba, Lilla Barancsuk, Balázs Székely and Judit Zöldföldi 587

A Database and GIS Project about Quarrying, Circulation and Use of Stone During the Roman Age in *Regio X - Venetia et Histria*. The Case Study of the Euganean Trachyte
Caterine Previato and Arturo Zara 597

5. QUARRIES AND GEOLOGY

The Distribution of Troad Granite Columns as Evidence for Reconstructing the Management of Their Production
Patrizio Pensabene, Javier Á. Domingo and Isabel Rodà 613

Ancient Quarries and Stonemasonry in Northern Choria Considiana
Hale Güney 621

Polychromy in Larisaean Quarries and its Relation to Architectural Conception
Gizem Mater and Ertunç Denktaş 633

Euromos of Caria: the Origin of an Hitherto Unknown Grey Veined Stepped Marble of Roman Antiquity
Matthias Bruno, Donato Attanasio, Walter Prochaska and Ali Bahadir Yavuz 639

Unknown Painted Quarry Inscriptions from Bacakale at *Docimium* (Turkey)
Matthias Bruno 651

The Green Schist Marble Stone of Jebel El Hairech (North West of Tunisia): a Multi-Analytical Approach and its Uses in Antiquity
Ameur Younès, Mohamed Gaied and Wissem Gallala 659

Building Materials and the Ancient Quarries at *Thamugadi* (East of Algeria), Case Study: Sandstone and Limestone
Younès Rezkallah and Ramdane Marmi 673

The Local Quarries of the Ancient Roman City of *Valeria* (Cuenca, Spain)
Javier Atienza Fuente 683

The Stone and Ancient Quarries of Montjuïc Mountain (Barcelona, Spain)
Aureli Álvarez 693

Notae Lapicidinarum: Preliminary Considerations about the Quarry Marks from the Provincial Forum of *Tarraco*
Maria Serena Vinci 699

The Different Steps of the Rough-Hewing on a Monumental Sculpture at the Greek Archaic Period: the Unfinished Kouros of Thasos
Danièle Braunstein 711

A Review of Copying Techniques in Greco-Roman Sculpture
Séverine Moureaud 717

Labour Forces at Imperial Quarries
Ben Russell 733

Social Position of Craftsmen inside the Stone and Marble Processing Trades in the Light of Diocletian's Edict on Prices
Krešimir Bosnić and Branko Matulić 741

6. STONE PROPERTIES, WEATHERING EFFECTS AND RESTORATION, AS RELATED TO DIAGNOSIS PROBLEMS, MATCHING OF STONE FRAGMENTS AND AUTHENTICITY

Methods of Consolidation and Protection of Pentelic Marble
Maria Apostolopoulou, Elissavet Drakopoulou, Maria Karoglou and Asterios Bakolas 749

7. PIGMENTS AND PAINTINGS ON MARBLE

Painting and Sculpture Conservation in Two Gallo-Roman Temples in Picardy (France): Champlieu and Pont-Sainte-Maxence
Véronique Brunet-Gaston and Christophe Gaston 763

The Use of Colour on Roman Marble Sarcophagi
Eliana Siotto 773

New Evidence for Ancient Gilding and Historic Restorations on a Portrait of Antinous in the San Antonio Museum of Art
Jessica Powers, Mark Abbe, Michelle Bushey and Scott H. Pike 783

Schists and Pigments from Ancient Swat (Khyber Pukhtunkhwa, Pakistan)
Francesco Mariottini, Gianluca Vignaroli, Maurizio Mariottini and Mauro Roma 793

8. SPECIAL THEME SESSION: „THE USE OF MARBLE AND LIMESTONE IN THE ADRIATIC BASIN IN ANTIQUITY"

Marble Sarcophagi of Roman Dalmatia Material – Provenance – Workmanship
Guntram Koch 809

Funerary Monuments and Quarry Management in Middle Dalmatia
Nenad Cambi 827

Marble Revetments of Diocletian's Palace
Katja Marasović and Vinka Marinković 839

The Use of Limestones as Construction Materials for the Mosaics of Diocletian's Palace
Branko Matulić, Domagoj Mudronja and Krešimir Bosnić 855

Restoration of the Peristyle of Diocletian's Palace in Split
Goran Nikšić 863

Marble Slabs Used at the Archaeological Site of Sorna near Poreč Istria – Croatia
Đeni Gobić-Bravar 871

Ancient Marbles from the Villa in Verige Bay, Brijuni Island, Croatia
Mira Pavletić and Đeni Gobić-Bravar 879

Notes on Early Christian Ambos and Altars in the Light of some Fragments
from the Islands of Pag and Rab
Mirja Jarak 887

The Marbles in the Chapel of the Blessed John of Trogir
in the Cathedral of St. Lawrence at Trogir
Đeni Gobić-Bravar and Daniela Matetić Poljak 899

The Use of Limestone in the Roman Province of Dalmatia
Edisa Lozić and Igor Rižnar 915

The Extraction and Use of Limestone in Istria in Antiquity
Klara Buršić-Matijašić and Robert Matijašić 925

Aurisina Limestone in the Roman Age:
from Karst Quarries to the Cities of the Adriatic Basin
Caterina Previato 933

The Remains of Infrastructural Facilities
of the Ancient Quarries on Zadar Islands (Croatia)
Mate Parica 941

The Impact of Local Geomorphological and Geological Features
of the Area for the Construction of the Burnum Amphitheatre
Miroslav Glavičić and Uroš Stepišnik 951

Roman Quarry Klis Kosa near Salona
Ivan Alduk 957

Marmore Lavdata Brattia
Miona Miliša and Vinka Marinković 963

Quarries of the Lumbarda Archipelago
Ivka Lipanović and Vinka Marinković 979

Island of Korčula – Importer and Exporter of Stone in Antiquity
Mate Parica and Igor Borzić 985

Faux Marbling Motifs in Early Christian Frescoes
in Central and South Dalmatia: Preliminary Report
Tonči Borovac, Antonija Gluhan and Nikola Radošević 995

INDEX OF AUTHORS 1009

DOI: https://doi.org/10.31534/XI.asmosia.2015/01.05

MARBLE WALL DECORATIONS FROM THE IMPERIAL MAUSOLEUM (4TH C.) AND THE BASILICA OF SAN LORENZO (5TH C.) IN MILAN: AN UPDATE ON COLORED MARBLES IN LATE ANTIQUE MILAN

Elisabetta Neri[1,3], Roberto Bugini[2] and Silvia Gazzoli[3]
[1] Université Paris-Sorbonne, Paris, France/Università Cattolica del Sacro Cuore, Milan, Italy (Elisabetta.neri@unicatt.it)
[2] CNR-ICVBC, Ist. Conservazione Beni Culturali, Milan, Italy (bugini@icvbc.cnr.it)
[3] Università Cattolica del Sacro Cuore, Milan, Italy (silviag.gazzoli@gmail.com)

Abstract

The unpublished remains of marble *crustae* from late Antique Milan are here presented. They covered the walls of two buildings of imperial commission in Milan: the Imperial Mausoleum and the Basilica of San Lorenzo (4th–5th C. AD). The comparison between the two buildings allows the formulation of hypotheses on the supply, reuse and use of this type of decoration for two buildings that were designed less than one century apart, but in two definitely different political contexts.

Keywords
Opus sectile, Late Antique, colored marbles, Milan, wall decoration

This papers aims at presenting the unpublished remains of the marble *crustae* from the walls of two Late Antique buildings in Milan, both under the emperor's patronage: the Imperial Mausoleum and the Basilica of San Lorenzo. The former was built in the mid–4th c.[1], the second completed by the mid–5th c.[2]

A lithological examination of the remains and the observation of the manufacturing marks on the slabs allow the identification of the lithotypes used in the two sites, a review of the cutting techniques, and the acquisition of information on the reuse of the materials and on the customer's means. By comparing the two sites, some considerations can be made on the supply, the reuse and the diffusion of this type of decoration in Late Antique Milan.

E.N.–R.B.

1 SANNAZARO 2015; LUSUARDI SIENA, NERI 2013.

2 NERI, LUSUARDI SIENA, GREPPI 2015.

1. The Imperial mausoleum

Context

The Imperial Mausoleum, located in the south-western suburbium of Milan, was demolished in the 16th c. to build the present-day church of San Vittore al Corpo. A small portion of the mausoleum was excavated by Mario Mirabella Roberti in 1972–73. The building was located in one of the first necropoleis to be Christianized (since the first half of the 4th c.). It had an octagonal plan, alternating circular and rectangular niches, and its elevation probably included upper galleries, as suggested by comparing it with an anonymous depiction (at the Staatsgalerie in Stuttgart) and with the later example of Sant'Aquilino. It was erected in the mid–4th c., according to a recent thermoluminescence analysis of the foundation's bricks[3]. Of its rich decoration, only the imprint of the floor *opus sectile* remains on site, with black and white alternating triangles and hexagons, a common pattern in 4th c. Northern Italy.

Short before the demolition of the mausoleum, Jacopo Filippo Besta (15th c.) described its architecture, organized on two floors, with corridors and an upper deambulatory, as "as round above as it is below", adding that it was "all finished with mosaic". Bonaventura Castiglioni (+1553) describes the ancient appearance of the building, focusing his attention on the parietal *sectilia*: "some works in the finest marbles of different colours, tessellated, that is like mosaics; stone slabs sawn with various friezes, composed with vases, flowers and animals, which have now disappeared, the walls whitewashed and the magnificent works withdrawn" [4]. The

3 SANNAZARO 2015.

4 Bonaventura Castiglione, cod Ambr. N. 153, f. 30v.: 'in cotesto tempio vi erano anche alcuni lavori di marmi finissimi di diversi colori tassillati, ossia alla mosaica, tavole di pietra segate con frisi varii, componuti di vasi

author testifies that the figurative marble inlays had been removed and replaced with a white wall.

While neglected until the present day, some elements of this decoration were unearthed by the excavations in the 1970s: marble *crustae*, glass tesserae, painting and stucco fragments. The *crustae* are described here in particular: by rereading the excavation journals, we could identify the locations of their findings, which occurred while removing the layers of collapse of the building (between April and May 1973).

E.N.

The crustae

The preserved *crustae* represent less than 1% of the surface that was probably decorated in the excavated portion of the mausoleum. When the building was demolished, the decoration had already been largely removed; some fragments of medieval and late medieval frescoes, also found in the layers of collapse, testify that some portions of the wall – most likely where the early Christian decoration was lacunary – were integrated by painting.

The *crustae* are predominantly made of imported marble, with the exception of "nero delle Prealpi" and Palombino limestone; moreover, precious lithotypes – mentioned as the most expensive in the *Edictum de pretiis* – predominate: Imperial porphyry (Egypt), Spartan basalt or "green porphyry" (*lapis lacedaemonius*, Greece), "Pavoazzetto" or Phrygian marble (Turkey), "giallo antico" or Numidian marble (*marmor numidicum*, Tunisia), Egyptian alabaster marble, and fine-grained white marbles. These are associated with "rosso antico" or Tainaron marble (*marmor taenarium*, Greece), "fior di pesco" (*marmor chalcidicum*, Greece), "cipollino" from Euboea (*marmor carystium*, Greece) and "africano" (*marmor luculleum*, Turkey)[5].

They are found in the following percentages:[6]: Imperial porphyry 9.2%, green porphyry 7.9%, pavoazzetto 5.3%, giallo antico 8.1%, alabaster 0.3%, fine-grained white marbles 7.2%, rosso antico 2/6%, Eretria red 7.4%, fior di pesco 6.3%, cipollino 10.1%, africano 5.8%, Nero delle Prealpi 7.4%, Palombino 22.2%.

The most frequent patterns that can be identified are simple rectilinear bands and border listels, kyma moulds with an oblique side, together with several listels with semicircular sections and flat slabs, mainly in pavoazzetto and africano marble. Geometrical elements are next in terms of abundance: lozenges, triangles and rectangles, which could have formed a decorative band similar to that observed in the panels with *rotae* in the apse of San Vitale in Ravenna. Elements of an achitectectural partition were also identified: a fragment of a fluted lesena, two spirals from a 30-cm wide Ionic capital, four egg and dart mouldings from an Ionic kyma with the corresponding linings, and some arrow-shaped elements (Fig. 1a).

Other elements form a well-known pattern with four petals inscribed in a circle: two variants are attested, one with palombino petals on a red porphyry background and a specular one with red porphyry petals on a white background (Fig. 1b). The decoration is enriched by other floral patterns, conveying the idea of nature's vitality: acanthus gyrals in fine-grain marble, with incised leaf veins; a four-petal flower, possibly surrounded by a gyral, as observed in the *domus* outside Porta Marina at Ostia[7]; and two other types of flowers, with elongated petals (Fig. 1c). Another floral pattern is formed by *peltae* and leaves within a squared frame, similar too to the samples from Porta Marina. Other elements, such as chalices, branches and pistils, give an idea of the diversity of the patterns. Finally, a *crusta* with a complex profile could be part of a vase.

Animals were most likely depicted in the branches, but only a protome with carved features and rubrication traces remains; based on comparison with similar *crustae* from the Euphrasian Basilica in Poreč[8] and from the domus on the Esquiline Hill in Rome, it could be interpreted as a fish[9] (Fig. 1d).

Therefore, beyond the usual geometrical repertoire common to other Milanese sites[10], vegetal and floral

di fiori e di animali, or venuti al meno, e datovi il bianco levate l'opere magnifiche'.

5 On the value of the different lithotypes based on the Edictum, see *Marmi antichi* 1989 and *I marmi colorati della Roma imperiale* 2006. For specific considerations on the prices see GNOLI 1988.

6 The quantitative data are furnished in weight of material. The percentages are similar to these of number of crustae per material.

7 GUIDOBALDI 2000, 251–262 and references.

8 TERRY 1986, 147–164.

9 FOGAGNOLO 2011, 455–466.

10 *Crustae* from wall decorations have been identified in buildings with Imperial patronage (Herculean baths, Imperial palace, basilica of San Lorenzo) and in the churches founded by Ambrose. No systematic and comprehensive study of these materials has been carried out, which would allow their chronology to be clarified. The only context studied in detail is the baptistery of San Giovanni alle Fonti, dated to the 5th–6th c. phase; only there some figurative and geometric sectilia have been recognized (such as four-petal flowers, or patterns of alternated triangles and lozenges) similar to those suggested from the loose elements from the Mausoleum (LUSUARDI SIENA, SACCHI 2004).

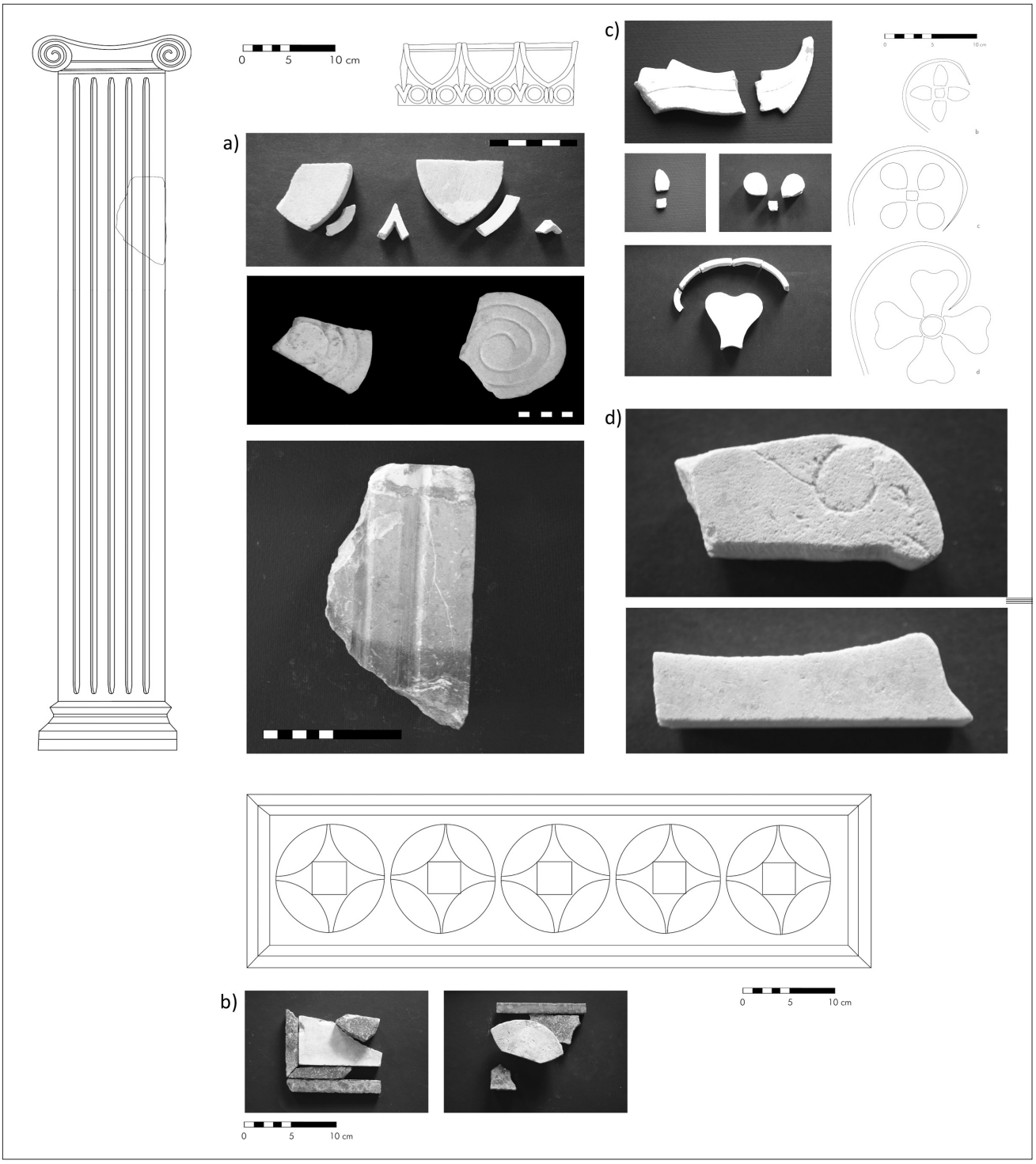

Fig. 1. Imperial Mausoleum (Milan Italy), *crustae*: a. architectonical elements, b. vegetal elements, c. geometrical compositions, (photo: E. Neri)

motifs – more complex to execute – give the wall decoration a peculiar animation.

From a technical standpoint, the *crustae* have two flat sides, one of which is smoothed (more rarely two for the reused pieces). The side in contact with the mortar is sometimes not smoothed, but rather displays the marks of wire-sawing, i.e. slightly oblique and curved parallel grooves.

The thickness is rather regular within a given set of crustae. The cases of reuse or reworking are extremely sparse, as is the case for the site of Porta Marina at Ostia, but not for the urban *domus* on the Pincian and Esquiline hills as well as the so-called *domus* "above the Seven Halls"[11]. The borders are carefully cut, edged and hewn with a "martellina", except the curved listels that are neatly smoothed. All pieces except those in Nero delle Prealpi or Palombino are polished. A fragment of an alabaster slab is still clamped to its original cocciopesto mortar by an L-shaped bronzed clamp.

The decoration was integrated by small, thin glass elements coloured in purple, yellow and blue.

The scarcity of reused elements, the prevalence of precious imported marbles, the diversified repertoire of motifs and the integration of glass indicate exceptional standards for the workshop and the artisans, as well as for the financial and supply capacity of the customer. This observation is not surprising given the context of Imperial patronage; furthermore, it suggests that the decoration be dated to the time of the building's conception or shortly afterwards.

The repertoire is similar to what the artisans used when working for the potentiores who financed not only the *domus* at Porta Marina, an inevitable reference thanks to its state of conservation, but also the urban *domus* "above the seven halls", in the Cadorna barracks on the Esquiline Hill and on the Pincian Hill, where the same workers as at Porta Marina are supposed. The traces of similar decoration in Milan could be a confirmation that the models and the artisans from Rome circulated outside the city, as supposed already for the Spanish *villae* of Gabia la Grande, Elche and Antequera[12], which are chronologically near the construction of the Imperial mausoleum.

E.N.

11 For Porta Marina at Ostia, see GUIDOBALDI 2000. For the urban *domus* on the Esquiline and Pincian hills, see respectively FOGAGNOLO 2011 and RONCHETTI 2009, 241–252. For the *domus* "above the seven halls", see BIANCHI, BRUNO, DE NUCCIO 2002, 161–168 and 465.

12 PEREZ OLMEDA1996, 81–82, 133–134. GUTIÉRREZ DEZA 2005, 71–86.

2. San Lorenzo

Context

The church is built immediately outside the Roman gate (Porta Ticinese), on previously unoccupied land, surrounded by canals and near the fluvial harbour, not far from the amphitheatre whose conglomerate blocks (of Ceppo del Brembo stone) were reused for the basilica's foundations.

The dating, patronage and original function of the church are still debated. However, especially since Laura Fieni's studies, most scholars agree to date it between the late 4th and the early 5th c., based on archaeological and archaeometric elements (dating of pottery from an excavation below the façade and of the amphorae from the dome's cover; construction technique). Thermoluminescence dating of the bricks and C14 analyses of mortar return an average dating between 390 and 410. The grandeur of the construction, the richness of the decoration and the reuse of material from public buildings tied to the Imperial authority suggest that the customer was the Emperor himself or a member of his family: Theodosius, who died in Milan in 395; Stilicho, the Barbarian general whom he left as a regent; or Galla Placidia, his daughter, as stated by post-9th c. sources. More recently, patronage by Valentinian III was proposed[13].

Written sources repeatedly highlight the presence of magnificent marble covering. Bishop Veranus of Cavaillon (+589), who was in Milan on St. Lawrence's day on his way back from Rome and had already visited Ravenna, thought that San Lorenzo was the most beautiful church in Italy (*domus mirificam*). The *Versus de Mediolano civitate* (8th c.) takes the church as an example of the splendour of the city, with its interior (*alma intus*) shining with a variety of marbles and a gold cover. Later sources insist on the presence of porphyry and gold, two materials linked with the Imperial functions of the church. According to the 9th-c. bishop Benzo of Alba, "there is no more beautiful church in Italy" than San Lorenzo, "all in porphyry and gold" (*Ad Heinricum imperatorem libri VII*, MGH, *In usum scholarum*, LXV, SS, XI). The three chapels of Sant'Aquilino, Sant'Ippolito and San Sisto also had a decoration similar to that of the central part of the church.

For Sant'Aquilino in particular, the only chapel with surviving decoration, Galvano Flamma (*Chronica extravagans* and *Chronica maior*, 14th c.) recalls the ornaments in porphyry and other precious marbles. Carlo Torre (*Il ritratto di Milano*, 1674) records the presence of round slabs of precious marble between the arches.

13 NERI, LUSUARDI SIENA, GREPPI 2015b.

Fig. 2. Basilica of San Lorenzo (Milan, Italy), chapel of Sant'Aquilino, inlaid marble: pseudo-Corinthian capitals (2 c. AD) of pilaster, re-use in the 5 c. decoration (photo: C. Bozzi)

Non-stratigraphic excavations and restorations, carried out in 1913 and 1937, revealed numerous fragments of the marble wall decoration, but only now are they studied systematically. Due to the excavation procedures, these fragments do not have a context, other than a generic attribution to the central part (tetraconch) of the church or to Sant'Aquilino.

E.N.

Marble decoration in Sant'Aquilino

A wide range of decoration types has been found for Sant'Aquilino[14]. The octagon was probably decorated with an architectural partition: the remains consist of two fragments of wide slabs, similar to those found in the villa of Toscolano Maderno[15] and in the apse of San Vitale, as well as bases (3 fragments) and shafts (6 fragments) of fluted lesenae in cipollino marble, topped with reused 2nd c. capitals in fine-grained white and rubricated marble (Fig. 2). The lesenae have two types of fluting, suggesting that they were used in different locations or in a corner (Fig. 3). Curved listels framing large circular slabs demonstrate the presence of *rotae* (Fig. 4).

On top of geometrical patterns – a trace of which remains imprinted in the original mortar, still preserved in the chapel – carved or bas-relief slabs in cipollino from Euboea, displaying friezes with gyrals, vases, and naturalistic figures (birds, fish, etc.), enriched the decoration (Fig. 5). Some carved fragments with branches stemming from a *cantharos*, as well as fragments from a slab showing gyrals from a chalice, rendered in bas-relief with a raw background (Fig. 6 and 7), deserve a specific mention[16].

E.N.

Marble decoration from the tetraconch of the church

The remains of the decoration of the central part of the basilica are more fragmentary but more abundant (1450 *crustae*)[17].

There is little information available on the context where the fragments were found: Calderini, Chierici and Cecchelli[18] report piles of stone elements of various types, mixed with demolition materials, as generically found in the main hall of the church.

A large variety of marble is attested: both local materials (Majolica limestone and Nero delle Prealpi) and imported stones are represented. White "marbles" are predominant, accounting for 49% of the fragments; among these, medium-grained marble is prevalent, followed by coarse-grained and fine grained marble,

14 LUSUARDI SIENA 1990.

15 SACCHI 2015.

16 These remains are currently on exhibit in Sant'Aquilino.

17 All the materials are now in the upper gallery of the church. For the followed methods see ANGELELLI, GUIDOBALDI 2002, 155–163, with some modifications proposed in FURLAN, MADRIGALI 2009, 817– 851.

18 CALDERINI, CHIERICI, CECCHELLI 1951, 88.

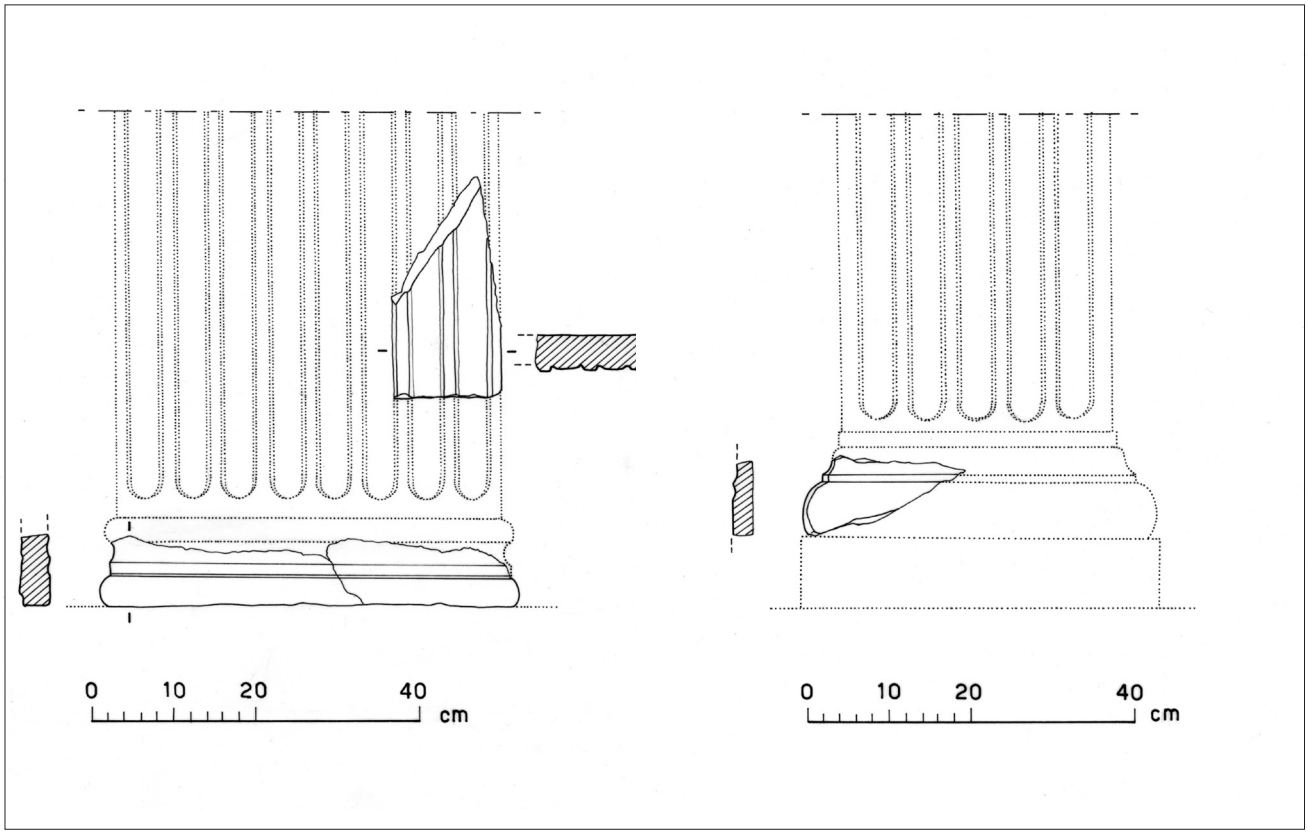

Fig. 3. Basilica of San Lorenzo (Milan, Italy), chapel of Sant'Aquilino, inlaid marble: elements of pilaster (drawing: R. Rachini)

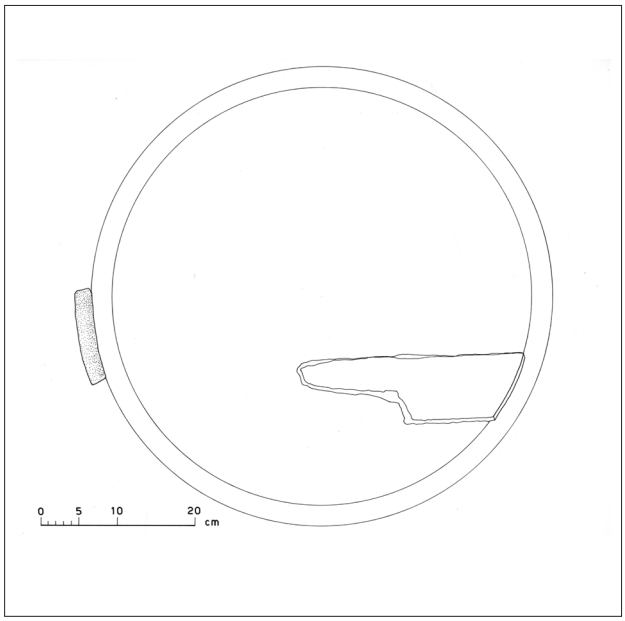

Fig. 4. Basilica of San Lorenzo (Milan, Italy), chapel of Sant'Aquilino, inlaid marble: elements of *rotae* (drawing: R. Rachini)

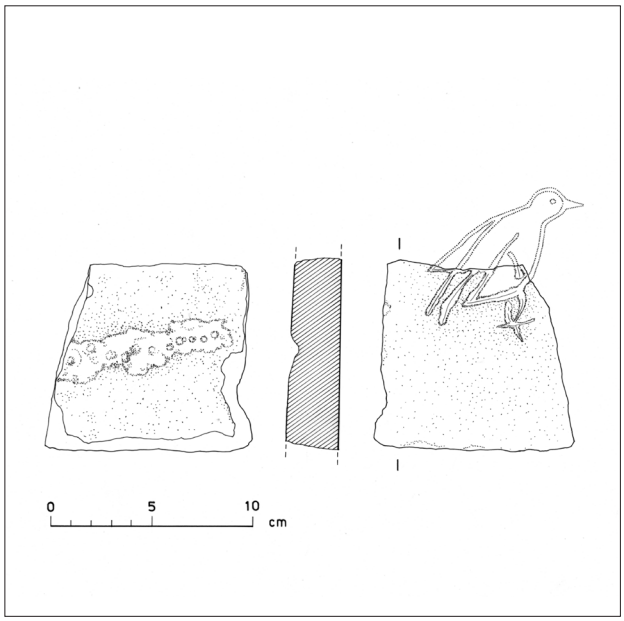

Fig. 5. Basilica of San Lorenzo (Milan, Italy), chapel of Sant'Aquilino, inlaid marble with bird (drawing: R. Rachini)

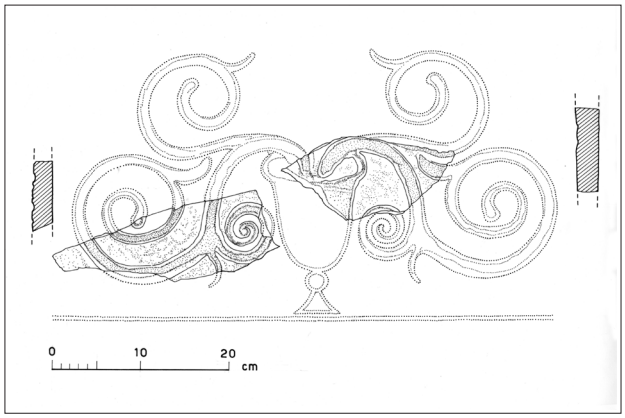

Fig. 6. Basilica of San Lorenzo (Milan, Italy), chapel of Sant'Aquilino, inlaid marble with vase and vegetal gyrals (drawing: R. Rachini)

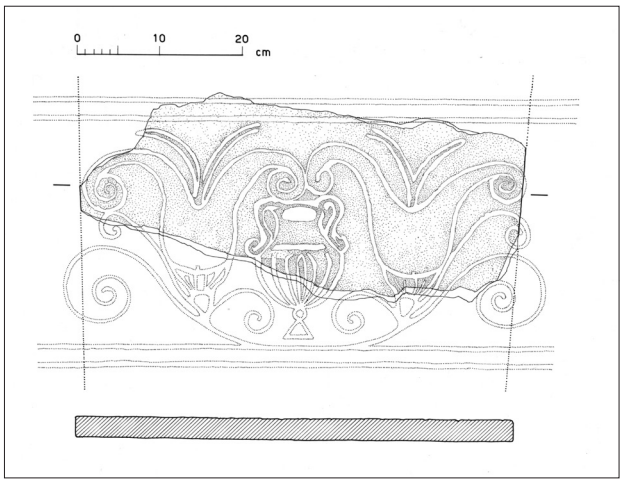

Fig. 7. St. Lorenzo church (Milan, Italy), St. Aquilino chapel, inlayed marble with Kantharos and floral gyrals (drawing: R. Rachini)

Proconnesian marble, Thassos marble, Majolica limestone, Musso marble, Botticino stone and very thin-grained marbles. A large variety of coloured marbles has been observed, representing 41% of the observed fragments. The most frequently attested is "pavoazzetto", followed by Giallo antico; less frequent lithotypes include Cipollino, Rosso Antico, Breccia Corallina, Africano, Fior di Pesco, Portasanta, Bianco and Nero Antico, Rosso Ammonitico, Grigio Arabescato and Greco Scritto. The limited presence of porphyry is remarkable: Imperial porphyry is represented by one small fragment, whose shape suggests it belonged to a curved element of a frame, and green porphyry is also observed in only one fragment. Black limestone from the Lombard Alpine foothills (Nero delle Prealpi, most likely from the "Calcari di Perledo e Varenna" Triassic formation) represent 10% of the fragments.

In terms of shapes, a reduced number of squares and hexagons is observed (respectively 4 and 9 samples), with varying thickness and sizes. This is in contrast with a large number of triangles, made of white and coloured marbles and black limestone, which could have formed linear bands[19] as suggested by the presence of isosceles triangles[20]. Listels of white and coloured marble are also abundant, hinting at the presence of square or rectangular bands and borders. In terms of filling, large slabs of cipollino[21] and black limestone are found, as well as the only fragment of green porphyry. Lozenges are also observed, especially in white and coloured marble, with some samples in Nero delle Prealpi; they were most likely used in bands.

Curved elements made of Numidian marble have been identified; they are very thin (ca. 0.8 cm) and cut with a saw on both faces. However, no other reference in the studied materials allows the reconstruction of a hypothetical pattern for this decoration. Another typical element is a triangle with two curved sides: together with other pieces with complex outline it suggests the presence of figurative elements (Fig. 8).

The *crustae* from this site have different characteristics. More than half of the fragments have both faces smoothed; the most notable exceptions are almost all the Nero delle Prealpi and Majolica fragments, as well as most of the Giallo antico fragments. In particular, black limestone fragments always have a coarse face and a smooth one, although the latter has a grey patina that sometimes hides the manufacturing features. Majolica and Giallo antico fragments show clear traces of chiselling, i.e. large conchoidal chipping, suggesting that the chisel was used perpendicularly or at a 75-degree angle[22].

In this context, it was not possible to identify the provenance of the elements from the same motif; however, it can be assumed that the materials belonged to different parts of the decoration and have been collected in one point after an accidental event. Some of the element display marks of fire, suggesting that the slabs were found with the remains of the early medieval destruction of the building, and had already been selected in ancient times.

S.G.

19 GUIDOBALDI 2009, fig. 14 c; BUGINI, FOLLI 2008, fig. 5.5.

20 GUIDOBALDI 2009, tav IV.F.

21 Fields in Cipollino have been also observed in San Giovanni alle Fonti (LUSUARDI SIENA, SACCHI 2004, 87).

22 ROCKWELL 1989.

Fig. 8. St. Lorenzo church (Milan, Italy), Tetraconch, inlayed marble with geometric pattern

3. Comparison

The comparison between the two sites shows that a figurative decoration, with small elements to render the details of floral, vegetal and animal motifs, was in place at the Imperial mausoleum. This explains the wide use of palombino, absent from San Lorenzo and from all other Milanese sites with marble decoration. The first parallel in Northern Italy comes from the recent study of the *crustae* from the villa in Toscolano Maderno[23]. Moreover, some lithotypes in the Mausoleum are not attested in San Lorenzo, e.g. "African" marble and Egyptian alabaster. The use of Imperial porphyry and green porphyry are more significant in the Mausoleum, although a selection of the marbles in ancient times has to be accounted for; the use of local marbles (Nero delle Prealpi and Botticino stone) is limited here, but widely documented in San Lorenzo.

The decoration in San Lorenzo and Sant'Aquilino primarily consists of geometrical motifs and architectural partitions. These partitions and the carved slabs are mostly made with Cipollino, newly graving re-used ancient slabs or reusing 2nd c. architectonical elements.

Though the reuse of older marble slabs is frequent, the technical know-how required to smooth, cut and polish the *crustae* does not change.

The mid-4thc. phase of the Imperial mausoleum includes an unusual type of figurative decoration, generally associated in literature with craftsmen from Rome[24]. The supply of (mostly new) coloured marble confirms the high-level patronage and its financial capacity at a time when the Imperial court resided in Milan. The 5thc. works in San Lorenzo, as shown for the construction materials as well[25], mostly reuse coloured marble slabs or architectural elements from other buildings, working them with the same techniques but using a larger proportion of locally sourced materials.

E.N.–R.B.

23 SACCHI 2015.

24 NERI *et al.* 2015a.

25 FIENI 2014.

REFERENCES

ANGELELLI C., GUIDOBALDI F. 2002: "Frammenti di opus sectile come materiali da scavo: criteri di individuazione, classificazione", in G. BISCONTIN, G. DRIUSSI (eds.): I Mosaici. Cultura, Tecnologia, Conservazione (Atti del convegno di studi, Bressanone 2–5 luglio 2002), Venezia, 155–163.

BIANCHI F., BRUNO M., DE NUCCIO M. 2002: "La domus sopra le Sette Sale: la decorazione pavimentale e parietale dell'aula absidata", in I marmi colorati, 61–168.

BUGINI R., FOLLI L. 2008: "Pavimenti in Opus Sectile a Milano e in Lombardia. L'uso dei calcari neri", in V Congresso Nazionale AIAR, 265–278.

BUGINI R., FOLLI L. 2015: "L'identificazione dei marmi della villa: indagini mineralogico-petrografiche" in I. ROFFIA (ed.): La villa romana dei Nonii – Arrii a Toscolano Maderno, Milano, 247–257.

CALDERINI A., CHIERICI G., CECCHELLI C. 1951: La basilica Maggiore di San Lorenzo in Milano, Milano.

FIENI L. 2004: La costruzione della basilica di S. Lorenzo, Milano.

FOGAGNOLO S. 2011: "Nuove acquisizioni di opus sectile parietale e pavimentale dagli scavi della caserma 'R. Cadorna' all'Esquilino", in AISCOM XVI, 455–466.

FURLAN G., MADRIGALI E. 2009: I marmi di rivestimento in Nora. Il foro romano. Padova, 817–851.

GNOLI R. 1988: Marmora Romana, Roma.

GUIDOBALDI F. 2000: "La decorazione in *opus sectile* dell'aula", in S. ENSOLI-E. LA ROCCA (eds.): Aurea Roma: dalla città pagana alla città cristiana, 251–262.

GUIDOBALDI F. 2009: "Sectilia pavimenta tardoantichi e paleocristiani a piccolo modulo in Italia settentrionale", in Rivista di Archeologia Cristiana, 85, 355–419.

GUTIÉRREZ DEZA M. I. 2005: "Sectile figurado de la Villa de la Estación de Antequera", Mainake, XXVII, 71–86.

I Marmi Colorati della Roma Imperiale, M. DE NUCCIO, L. UNGARO (eds.), Venezia.

LUSUARDI SIENA S. 1990: "2a36. Il complesso laurenziano. L'arredo interno e i rivestimenti parietali", in Milano capitale dell'impero romano (286–402 d.C.), Milano, 143–144.

LUSUARDI SIENA S., SACCHI F. 2004: "Per un riesame dei sectilia parietali paleocristiani del battistero di S. Giovanni alle Fonti a Milano", in S. LUSUARDI SIENA, F. SACCHI (eds.): I colori ritrovati. Il contributo dell'archeologia alla conoscenza degli elementi di arredo nell'architettura tra tarda antichità e medioevo, Milano, 145-159.

LUSUARDI SIENA S., NERI E. 2013: "La basilica portiana e S. Vittore al Corpo: un punto di vista archeologico", in Ambrogio e l'arianesimo, Studia ambrosiana 7, 147-192.

Marmi antichi, G. BORGHINI (ed.), Roma 1989.

NERI E., BUGINI R., VERITÀ M. 2015a: Frammenti della decorazione parietale del mausoleo imperiale di Milano (IV sec.): i materiali e la loro caratterizzazione, XX Colloquio AISCOM (Roma, 19-22 marzo 2014), Tivoli, 159-169.

NERI E., LUSUARDI SIENA S., GREPPI P. 2015b: Il problema della cronologia del cantiere di San Lorenzo a Milano. Vecchi e nuovi dati a confronto, in Il culto di San Lorenzo tra Milano e Roma, Studia ambrosiana 8, 115-164.

PEREZ OLMEDA E. 1996: Revestimentos de "Opus sectile" en la Peninsula ibérica, Madrid.

ROCKWELL P. 1989: Lavorare la pietra: manuale per l'archeologo, lo storico d'arte e il restauratore (Beni culturali 7), Roma

RONCHETTI E. 2009: Opus sectile parietale da una residenza sul Pincio, in AISCOM XII, 241–252.

SACCHI F. 2015: "La decorazione marmorea e gli arredi lapidei", in I. ROFFIA (ed.): La villa romana dei Nonii – Arrii a Toscolano Maderno, Milano, 236–247.

SANNAZARO M. 2015: "Lo sviluppo urbanistico di Milano in età paleocristiana", Atti del Seminario interdisciplinare 'Milano Archeologia per Expo 2015', Lanx 19, 79–94.

TERRY A. 1986: The *Opus sectile* in the Euphrausius cathedral at Poreč, DOP 40, 1986, 147–164.